Rack Stand

Parts List

1) Base
2) Legs
3) Tap Plate
4) Caster
5) Vertical Receiver
6) Horizontal Receiver

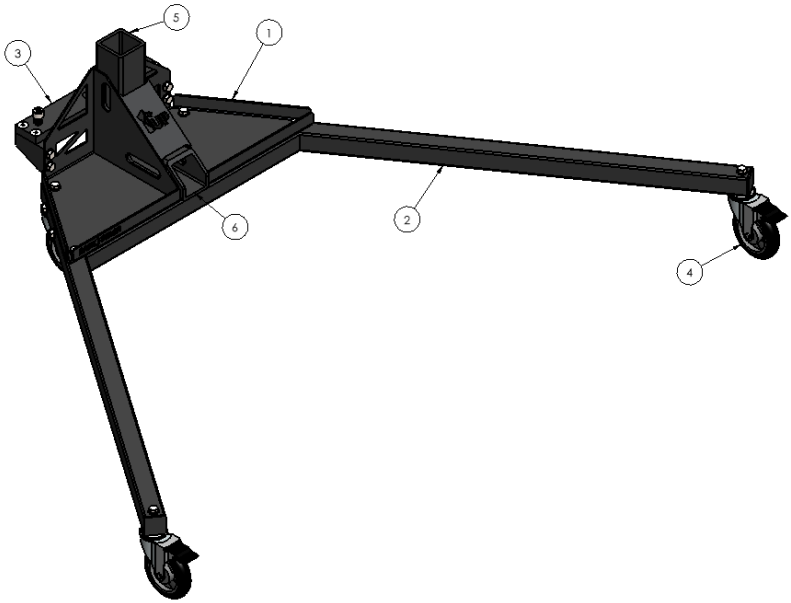

In the Box:

- (1) Base
- (2) Legs
- (1) Hardware Bag

Tools Required:

- 9/16” Wrench
- 9/16” Socket with Ratchet

Product Notes:

- 375 lb max capacity.

Step 1:

- Remove Base from packaging and set on surface.
- Partially thread provided Socket Heads into Tap Plate.
- Place Base upside down on surface.
- Align Leg with Base taking note of Caster and cut orientation.
- Insert 3/8-16 x 3.5” Hex Bolt with 3/8” Washer through Leg and Base.
- Place 3/8” Washer onto bolt and thread 3/8-16 Nut onto bolt.
- Repeat for opposing Leg.

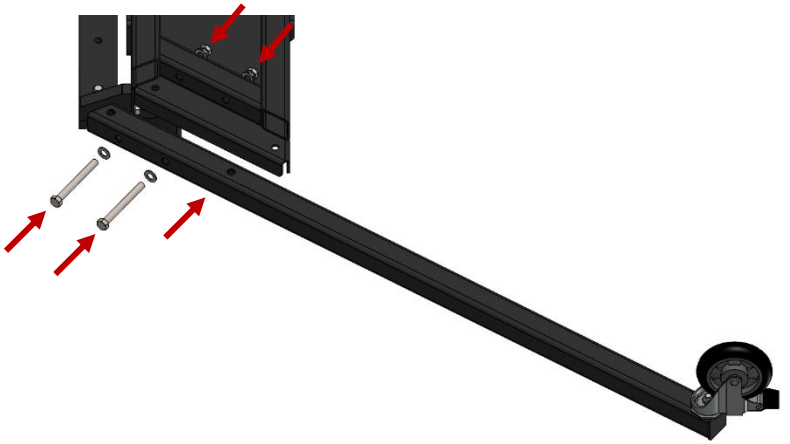

Step 2:

- Insert 3/8-16 x 2.25” Hex Bolt with 3/8” washer through Base and Leg.
- Place 3/8” Washer onto bolt and thread 3/8-16 Nut onto bolt.
- Insert 3/8-16 x 2.75” Hex Bolt with 3/8” washer through Base and Leg.
- Place Caster Bushing, Caster, and second Caster Bushing onto bolt taking note of orientation.
- Thread 3/8-16 Nut onto bolt.
- Repeat for opposing Leg and Caster
- Tighten all bolts from Steps 1 & 2 using Ratchet with 9/16” Socket and 9/16” Wrench.

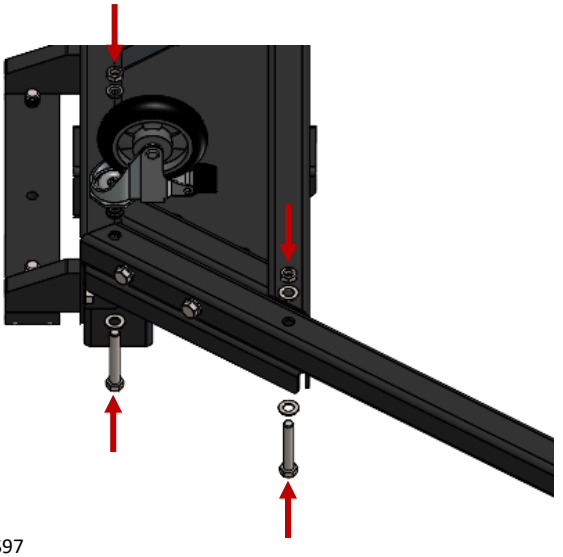



Usage:

- Roll Rack Stand near rear of vehicle.
- Lock Casters by stepping on black lock pedal.
- Insert Rack into desired receiver, Recon & Moto Racks to be inserted into Horizontal Receiver only.
- Tighten Rack anti-wobble and insert Hitch Lock for secure storage.
- Mount Add-Ons to Tap Plate using provided Socket Heads, ensure trays are oriented as shown.
- Place additional locks and accessories into base tray.
- Unlock Casters by lifting on black lock pedal.
- Roll Rack Stand to storage location and relock Casters.
- Repeat steps in reverse for moving Racks from Rack Stand to vehicle.



Additional Instructions

- Use caution while taking steps to assemble Rack Stand.
- Inspect Rack Stand periodically to ensure proper working conditions.

Questions or comments? Contact our support team via email at email@1up-usa.com